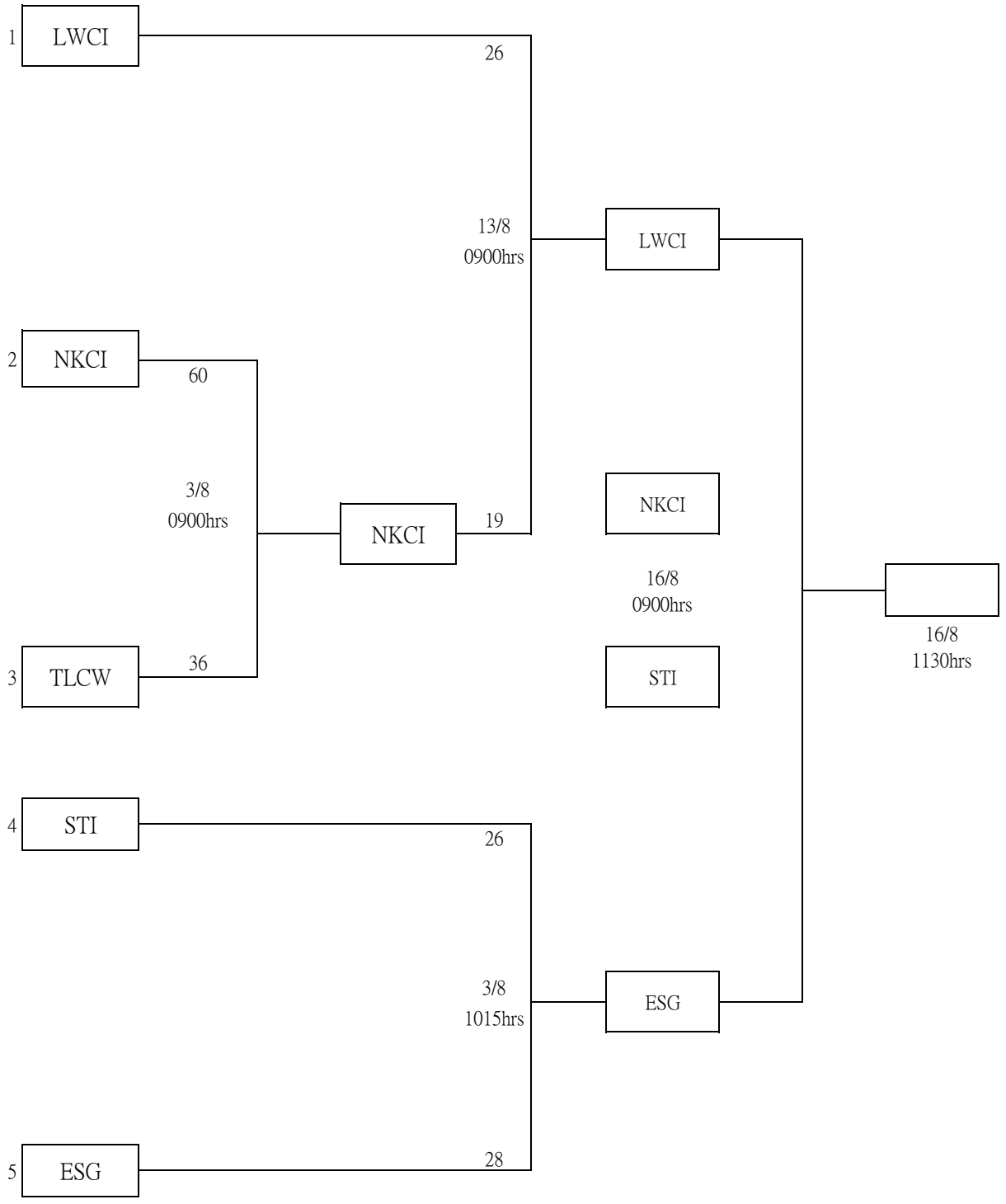2018/19 Inter-institutional Basketball Competition
Fixtures - Women's Institution